Piper Aircraft, Inc.
2926 Piper Drive
Vero Beach, FL, U.S.A. 32960

SERVICE BULLETIN NO. 1377

PIPER CONSIDERS COMPLIANCE MANDATORY

Date: January 9, 2024 (S) (M)

SUBJECT: **MAIN WING SPAR INSPECTION AT THE MAIN LANDING GEAR TRUSS BRACKET**

MODELS AFFECTED:	SERIAL NUMBERS AFFECTED:
PA-28R-180 Arrow	28R-30005 thru 28R-31270, 28R-7130001 thru 28R-7130013
PA-28R-200 Arrow / Arrow II	28R-30482, 28R-35001 thru 28R-35820, 28R-7135001 thru 28R-7635462
PA-28R-201 Arrow III / Arrow	28R-7737001 thru 28R-7837317, 2837001 thru 2837061, 2844001 thru 2844185
PA-28R-201T Turbo Arrow III	28R-7703001 thru 28R-7803373, 2803001 thru 2803012
PA-28RT-201 Arrow IV	28R-7918002 thru 28R-8218026
PA-28RT-201T Turbo Arrow IV	28R-7931002 thru 28R-8631004, 2831001thru 2831038
PA-32R-300 Lance	32R-7680003 thru 32R-7880068
PA-32RT-300 Lance II	32R-7885002 thru 32R-7985105
PA-32RT-300T Turbo Lance II	32R-7887002 thru 32R-7987126
PA-32R-301 Saratoga SP	32R-8013001 thru 32R-8613005, 3213001 thru 3213041
PA-32R-301 Saratoga II HP	3213029, 3213042 thru 3213103, 3246001 thru 3246244
PA-32R-301T Turbo Saratoga SP	32R-8029001 thru 32R-8629006, 3229001 thru 3229003
PA-32R-301T Saratoga II TC	3257001 thru 3257493
PA-34-200 Seneca	34-7250001 thru 34-7450220
PA-34-200T Seneca II	34-7570001 thru 34-8170092
PA-34-220T Seneca III	34-8133001 thru 34-8633014, 3433001 thru 3433021, 3433037 thru 3433044, 3433089 thru 3433172, 3448001 thru 3448035
PA-34-220T Seneca IV	3448038 thru 3448079, 3447001 thru 3447029
PA-34-220T Seneca V / Seneca	3449001 thru 3449232, 3449237 thru 3449239, 3449241 thru 3449269, 3449273, 3449275 thru 3449514
PA-44-180 Seminole	44-7995001 thru 44-8195026, 4495001 and up
PA-44-180T Turbo Seminole	44-8107001 thru 44-8207020

ATA/JASC: 5740

(OVER)

COMPLIANCE TIME: For aircraft that have reached 2,000 hours time in service (TIS), compliance is to coincide with the next regularly scheduled maintenance event, but not to exceed the next 100 hours TIS.

APPROVAL: The engineering aspects of this service document have been shown to comply with the applicable Federal Aviation Regulations and are FAA approved.

PURPOSE: A review of service history reveals that, on the affected aircraft, cracks may develop in the main wing spar at the interface with the main landing gear (MLG) truss brackets. This service bulletin mandates a one-time inspection for cracks in the main wing spars to the area common to the MLG truss brackets and a one-time report of inspection results to Piper.

This service bulletin provides instructions for the recurring replacement of this hardware, bolt hole inspection, and possible oversize hardware allowance.

INSPECTION METHOD: Follow the Instructions for the implementation of the inspection methods described here. This section describes the methodology for eddy current inspections.

Eddy Current Inspection Method

The standard, SAE ARP4402, “Eddy Current Inspection of Open Fastener Holes in Aluminum Aircraft Structure,” should be used when performing the applicable inspections under Instructions, below.

NOTE: Prior to inspection, wipe the surfaces clean using a soft cloth dampened with isopropyl alcohol or mineral spirits.

Personnel Qualifications:
Personnel that perform eddy current and/or fluorescent penetrant inspections shall be qualified in accordance with NAS 410 (or equivalent standards that are listed in FAA Advisory Circular (AC) 65-31B) as qualified Level II or Level III nondestructive inspection personnel.

Eddy current bolt hole inspections shall be performed in accordance with SAE ARP4402 or a written procedure specific to the aircraft being inspected and approved by the FAA.

Equipment:
- Equipment used shall provide impedance plane diagrams.
- Probes may be either absolute or differential coil configurations.
- For manual bolt hole probing: use probe collars at an increment of every 1/64 inch to ensure the uniform depth of rotation and to aid in reducing lift-off effects.
- Automated scanning systems may be used.
- Bolt hole probes shall match as closely as possible, but not exceed, the bolt hole diameter. Split core probes may be expanded to a maximum of 0.050 inch beyond the probe’s nominal diameter (based on the probe manufacturer’s recommendation). The fill factor shall be 80 percent minimum.
- Holes being inspected shall be no larger than 10 percent of the expanded bolt hole diameter.
- A right angle (90-degree) surface probe may be used for further detail indication, if needed.

Reference Standard:

- Any reference standard used shall be of the same conductivity 2024-T3 within ±15 percent IACs. It shall have electrical discharge machining (EDM) notches for simulating defects as calibration references.
- The surface finish shall be 63 RHR or better.
- The reference standard shall have a corner notch size of 0.030 x 0.030 inch (screen set at minimum of three divisions vertical with a phase signal of between 45 and 120 degrees separation from the horizontal lift-off).
- Frequency used shall be between 100 and 500 kHz.
- The calibration shall be checked at the beginning and end and every 30 minutes of inspections.

Acceptance:

Relevant crack or crack-like indications with amplitudes equal to or greater than 50 percent of the reference level signal shall be rejected and documented (i.e., such an amplitude reading may mean that the spar does not meet type design requirements and must be reported to Piper Aircraft for disposition; fluorescent penetrant inspection is to be accomplished on relevant indications as part of the evaluation).

It is possible for non-crack damage, such as fay gaps, thread marks, scratches, gouges, or edge chips in the spar bolt hole to return a flaw indication similar to that of a crack. Multiple indications or broad indications may be associated with fay gaps or swarf within these fay gaps and may not be representative of cracks.

If an indication is observed, the hole should be carefully inspected for non-crack damage to eliminate the possibility of a false crack indication. Any non-crack damage, should be cleaned per 'Cleaning Surface Imperfections', below, and inspected again. If cleaning results in an diameter measurement greater than the maximum allowed for a nominal hole size, a repair hole size may be permissible per the below instructions. If an indication is still observed, contact to Piper Aircraft, Inc. for disposition. See contact information below.

Cleaning Surface Imperfections:

Surface imperfections (blemishes, drag marks or scratches) in the hole bore can be locally cleaned – deburred, smoothed, and polished – using a medium (brown colored) or fine (rust colored) rubberized abrasive, either a point or cylinder, on a 1/16-inch mandrel in a rotary tool:

- Cratex Q8M or Q8F – 1 x 9/32 bullet point
- Cratex Q6M or Q6F – 7/8 x 1/4 cylinder

The best results are obtained between 7,500 and 15,000 RPM, using light work pressure. To procure Cratex points, call 800-800-4077 or visit www.cratex.com.

To Contact Piper:

Any unresolved crack indication(s) that is discovered as a result of inspections should be reported to Piper Aircraft Inc., at CustomerService@piper.com or (+1) 772-299-2141. Piper's normal business hours are Monday through Friday, **7:30 a.m. to 4:30 p.m. (Eastern Standard Time)**.

INSTRUCTIONS:

WARNING: FLIGHT WITH KNOWN CRACKS IN THE AIRCRAFT STRUCTURE IS NOT PERMITTED.

ANY CRACKS DISCOVERED IN THE AIRCRAFT STRUCTURE MUST BE REPAIRED PRIOR TO THE NEXT FLIGHT. AN AIRPLANE WITH A CRACK IN THE STRUCTURE DOES NOT MEET ITS TYPE DESIGN AND NO LONGER POSSESSES ITS REQUIRED TYPE DESIGN STRENGTH.

NOTES:
- Prior to any inspection, wipe surfaces clean using a soft cloth dampened with isopropyl alcohol, mineral spirits, naphtha, or other suitable cleaning agent.
- Refer to the appropriate section of the applicable Airplane Maintenance Manual or Service Manual for the procedures to jack the airplane and for model-specific instructions for the removal and installation of the main landing gear.
- Instructions below apply to both left and right sides of the aircraft.
- The inspections described in this service bulletin shall be accomplished using a 10X magnifier, a mirror, and a suitable light source or other equipment capable of providing equal or better resolution.

1. Place the airplane on jacks.
2. Remove the MLG truss brackets, two (2) each per aircraft, as shown in Figure 1. Replace any truss bracket hardware (bolts, nuts, and washers) on condition. Other components, including lubricator fittings, that are in serviceable condition may be retained for reinstallation.
3. Visual Inspection for Cracks

   Examine all surfaces covered by the main gear truss bracket for cracks, fretting wear, or other damage. Repair or replace on condition.

   a. If there is paint on the inspection area of the main wing spar, as shown in Detail A of Figure 1, remove it from the area specified using only chemical processes. Abrasives or other mechanical methods for paint removal may hide the existence of any cracks, making it impossible to do an accurate inspection. Use isopropyl alcohol to wipe clean where paint was removed in the inspection area.

   b. After paint is removed from the inspection area, perform a fluorescent penetrant inspection for cracks as described in FAA AC 43.13-1B, “Acceptable Methods, Techniques, and Practices – Aircraft Inspection and Repair,” Chapter 5, Section 5.

   c. Any cracks that are discovered must be reported to Piper. Regardless of findings, the inspection results must be reported to Piper electronically as described in step 5, below. If no cracks are found, wipe clean with isopropyl alcohol and apply primer to bare metal surfaces using MIL-PRF-85582D Type I Class C2 primer. Alternatively, use any primer conforming to MIL-PRF-23377 and apply per the primer manufacturer’s instructions.

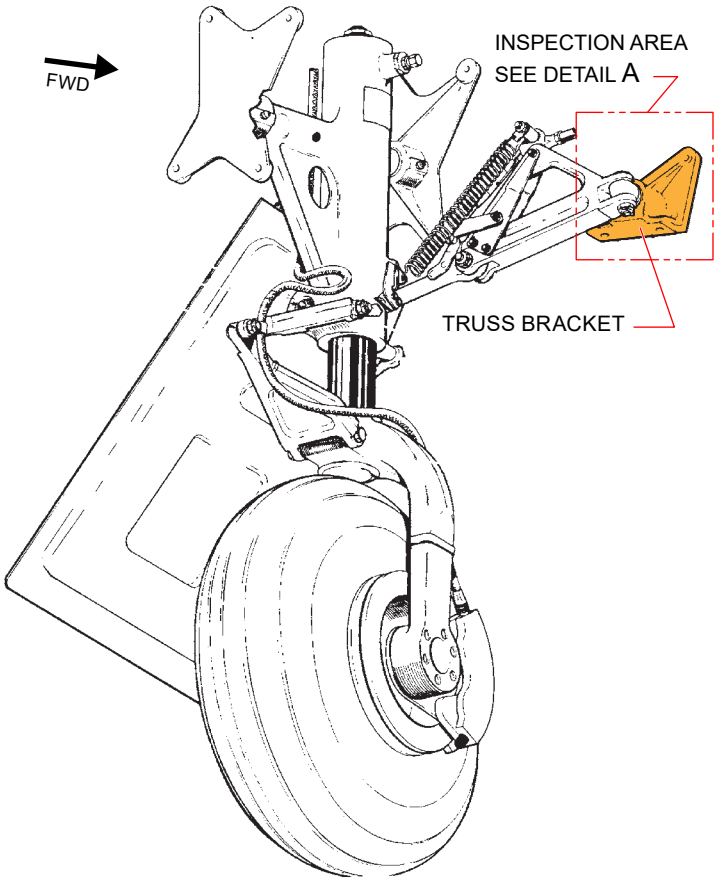

MAIN LANDING GEAR ASSEMBLY

ISOMETRIC VIEW
LEFT SIDE SHOWN (RIGHT SIDE OPPOSITE)

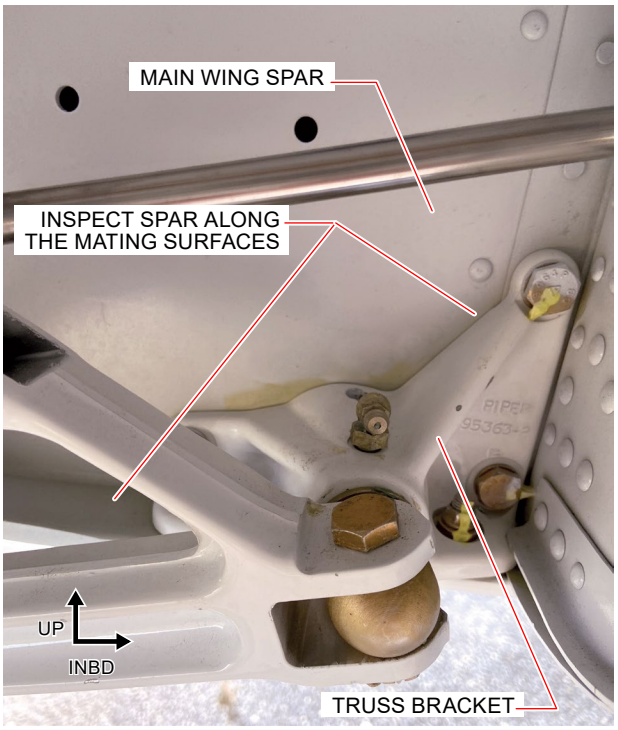

DETAIL A
INSPECTION AREA

LOOKING FORWARD AT
MLG TRUSS BRACKET AND MAIN WING SPAR

LEFT SIDE SHOWN (RIGHT SIDE OPPOSITE)

Figure 1
Main Landing Gear Truss Bracket

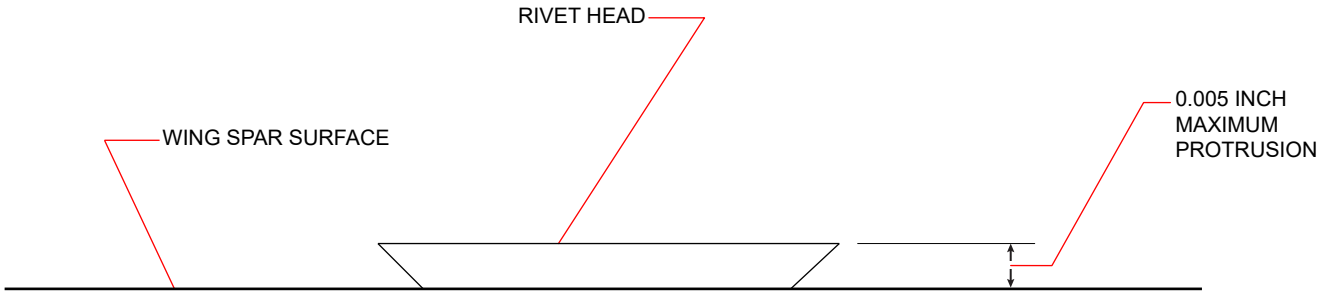

Figure 2
Truss Bracket Rivet Head Protrusion

4. Rework of Nonconforming Rivets

   Identify all countersink rivet heads in the main wing spar that are covered by the MLG truss brackets when installed. Depending on the aircraft model, these rivets could be associated with a wing rib, a nut plate, or some other airframe component.

   Measure the height of each rivet head above the local surface as shown in Figure 2. If the rivet head protrusion exceeds 0.005 inches, rework is required. Remove the nonconforming rivet and rework the 100° countersunk hole to achieve a rivet installation that is flush (+0.005 / -0.003 inch) to the adjacent surface. Install replacement MS20426AD-series rivet (NAS523 Code: BB), procured locally. Alternatively, use a rivet shaver to achieve the flushness requirement.

5. Inspection Feedback Report

   After inspection, complete the Feedback Form at https://techpubs.piper.com/feedback.

6. Bolt Hole Inspection

   NOTE: Unless stated otherwise, all dimensions are in inches.

   a. Measure the bolt holes common to the MLG truss bracket and the main wing spar (three holes through the web, two holes through the lower flange). Compare measured holes sizes against the acceptable maximum hole sizes shown in Table 1.

      - If all bolt holes do not exceed the values shown in Table 1, then no oversize repair bolts are required. Proceed to step 7.
      - If one or more bolt holes exceed the values shown in Table 1, replacement of the factory original hardware with a 1/64 or 1/32 oversize repair bolt is required. Proceed to Step b.

      NOTE: If bolts have signs of damage, they must be replaced and an eddy current inspection performed on the corresponding bolt holes in the spar following the guidance under Inspection Methods, above. A qualified NDT level II or III inspector is required to perform this inspection to ensure the spar does not have crack indications.

      NOTE: If the oversized bolt hole condition is limited to the MLG truss bracket and does not apply to the main wing spar, replace the MLG truss bracket and reinstall factory original hardware.

TABLE 1

ORIGINAL DESIGN ORIGINAL BOLTS WITH MAXIMUM BOLT HOLE SIZES

Nominal Original Bolt Size	Maximum Allowable Bolt Hole
1/4	0.2510
5/16	0.3130

b. For each bolt hole exceeding the maximum allowable bolt hole shown in Table 1, determine if the use of an oversize bolt is permissible. See Table 2 for permissible oversize bolt and reworked hole sizes.

1) For oversized holes in the spar web, measure the local thickness of the spar web near the affected bolt hole.

- If the web thickness measures 0.0908 or greater, a 1/64 or 1/32 oversized bolt is permissible.

2) For oversized holes in the spar flange, measure the local thickness of the spar flange near the affected bolt hole.

- If the flange thickness measures a minimum of 0.2694, a 1/64 oversized repair bolt is permissible.
- If the flange thickness measures 0.2713 or greater, a 1/64 or 1/32 oversized repair bolt is permissible.

If the spar flange thickness measures less than 0.2694, it may still be possible to address the discrepant condition with an oversized repair bolt. The following method requires an accurate measurement of the width of the spar flange; to gain access, the temporary removal of rivets common to the spar and the lower wing skin may be required.

Use the following formula:

$$D = W - (0.5942 \div T)$$

D = Maximum permissible reworked hole size, as calculated.
W = Measured width of the flange near the affected screw hole.
T = Measured thickness of the flange near the affected screw hole.

- If D does not exceed 0.2664, a 1/64 oversize repair bolt is permissible.
- If D does not exceed 0.2820, a 1/32 oversize repair bolt is permissible.

Example: W = 2.4930, T = 0.2675

$$D = 2.4930 - (0.5942 \div 0.2675)$$
$$D = 2.4930 - 2.2213$$
$$D = 0.2717$$

In the example above, D = 0.2717. Since D exceeds 0.2664, a 1/64 oversize repair bolt is not permissible; but, since D does not exceed 0.2820, a 1/32 oversize repair bolt is permissible.

c. To ensure a good fit between the repair bolt and oversized bolt hole, it is permissible (but not required) to ream the bolt hole within the minimum and maximum tolerances defined in Table 2. Refer to AC 43-13-1B for clean reaming procedures.

If a bolt hole cannot be cleaned up to within the specified tolerances or the local thickness of the spar where the bolt hole is located is insufficient, an alternative repair is required, which is outside the scope of this service bulletin.

7. Procure replacement installation hardware including oversize repair bolts as required. Refer to the appropriate Airplane Parts Catalog (APC) and Table 2 for part numbers.
8. Reinstall the MLG truss brackets. Torque all 1/4 inch bolts to 65−100 in·lb and all 5/16 inch bolts to 160−200 in·lb.
9. Perform a functional check on any systems that were disturbed during this inspection.
10. Remove the airplane from jacks.
11. Make a logbook entry documenting compliance with this service bulletin.

TABLE 2
OVERSIZED REPAIR PART NUMBERS AND BOLT HOLE TOLERANCES

Nominal Original Bolt Size	Repair Bolt Size	Repair Bolt (Through Web) (1)	Repair Bolt (Through Flange) (2)	Minimum Bolt Hole Size	Maximum Bolt Hole Size
1/4	1/64 oversize shank	NAS6204-*X	NAS7404-*X	0.2654	0.2664
	1/32 oversize shank	NAS6204-*Y	NAS7404-*Y	0.2810	0.2820
5/16	1/64 oversize shank	NAS6205-*X	NAS7405-*X	0.3279	0.3289
	1/32 oversize shank	NAS6205-*Y	NAS7405-*Y	0.3435	0.3445

(1) Repair Bolt Example:

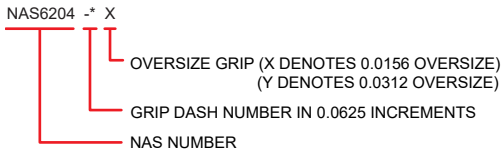

(2) Repair Bolt Example:

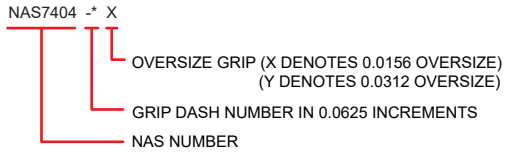

MATERIAL REQUIRED: Per aircraft:

- As required, bolts, per the applicable Piper APC and/or Table 2
- As required, washers and nuts, per the applicable Piper APC and/or Table 2
- As required, MS20426AD-series rivet (NAS523 Code: BB), procure locally

AVAILABILITY OF PARTS: Procure locally and/or at your Piper Approved Service Center – Find your local service center at https://www.piper.com/

EFFECTIVITY DATE: This service bulletin is effective on January 22, 2024.

SUMMARY: Please contact your Piper Approved Service Center to make arrangements for compliance with this service bulletin in accordance with the compliance time indicated.

NOTE: Please notify the factory of any address/ownership corrections. Changes should include aircraft model, serial number, and current owner's name and address.

Corrections and/or changes should be directed to:

PIPER AIRCRAFT, INC.
Attn: Customer Service
2926 Piper Drive
Vero Beach, FL 32960
or:
CustomerService@piper.com
Please include in subject line: "Aircraft ownership update"